6” I.D. Standard Industrial Parts Breakdown

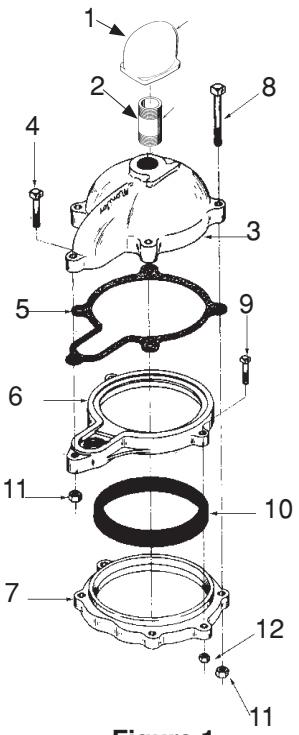

Figure 1

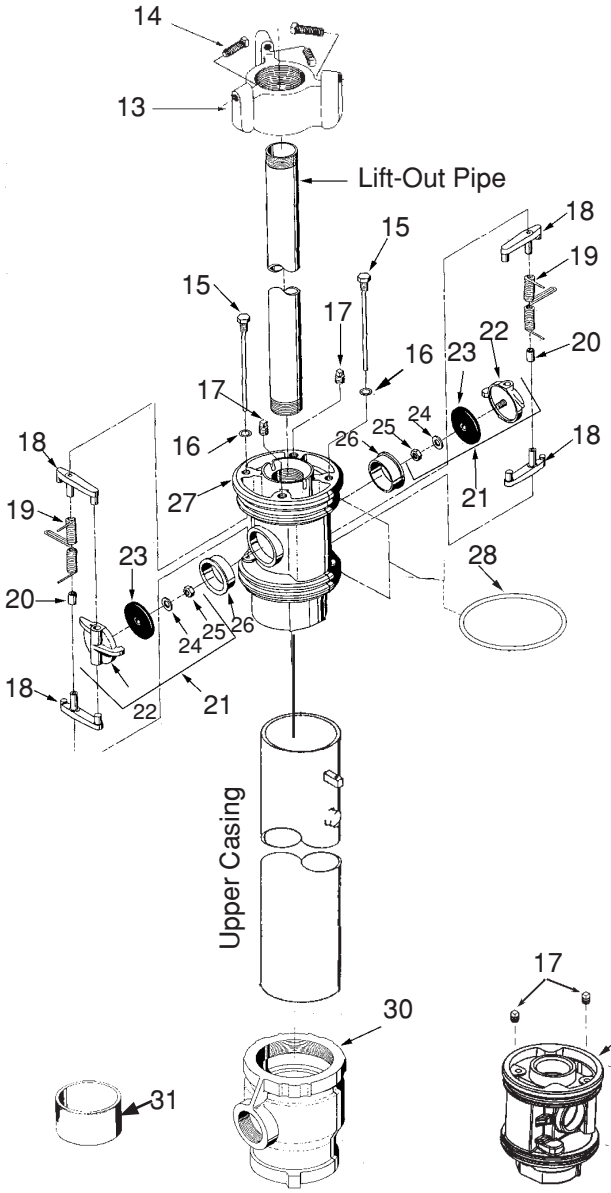

Figure 2

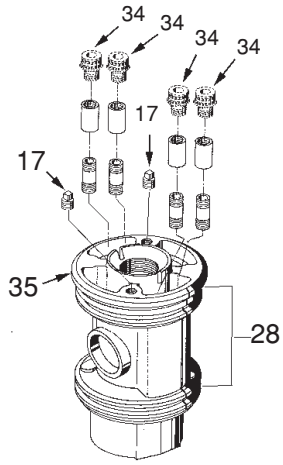

Figure 4-Flowing Well Spool with check Valves includes Key Nos. 15-28. (W/O Check Valves same as Fig. 3)

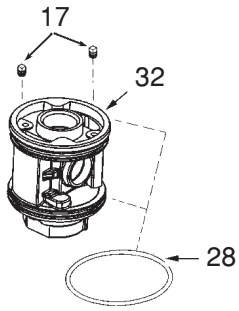

Figure 3

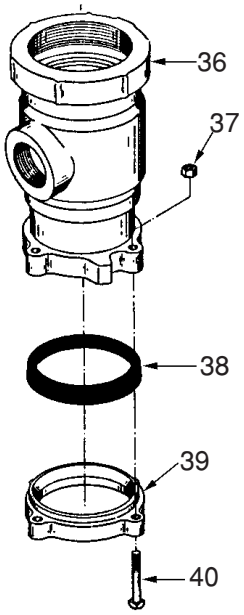

Figure 5

All Industrial Cap Bolts are made of Stainless Steel